An in-house WiFi-based decentralised Load-Balancing framework for SAR Applications

Mobile devices' computational demands have significantly increased over the last decade; therefore, most mobile applications are built upon APIs that run on cloud platforms. Applications that depend on large-scale data like SAR demand high computational resources for processing the data. There is an increasing trend of applications that are developed over radar data. Eventhough the present applications do not demand real-time processing, there is a significant possibility for such applications to be developed in the future. For example, the road extraction algorithm presented in [3] can be parallelised and processed using a distributed network by employing the Divisible Load Theory(DLT).

In Multi-Access Edge Computing (MEC), traffic and service processing are shifted from a centralised cloud to the network's edge, bringing it closer to the end-user. The data is processed and stored at the network's edge rather than at a remote data centre, reducing the latency dramatically. The 5G rollout has adopted MEC for mission-critical applications and IoT data processing, providing a combined network and computation solution. 5G and Wi-Fi technologies have been designed to complement each other and result in an infrastructure that is optimised for all types of communication[1]. There are around 9 billion Wi-Fi devices in use, with an additional 3 billion added each year. By 2024, the most optimistic estimate is 1.5 billion 5G devices. Therefore Wi-Fi devices although yet to be adopted, have a huge potential for adaptation to the MEC paradigm.

In-house or home-based WiFi routers can be endowed with computational capabilities to create a cluster of on-demand MEC resources to offload computations from User Equipment (UE). This distributed cluster of routers can also be a proprietary cluster system within an organizaiton. Employing such freely available computational resources forms a decentralised next-generation compute platform that can handle large-scale radar workloads. This multi-user heterogeneous multi-cell resource utilisation and computation offloading problem is challenging design and implementation. Studies so far have considered Multi-UEs with a single MEC cloud node for a wireless small cell network[2]. In this work, we consider a cluster of heterogeneous MEC resources to be used for computation offloading of divisible jobs from Multi-UEs present at multiple sites of the MEC as shown in Fig. 1. This offloading strategy utilises Divisible Load Theory(DLT) strategies to

distribute stochastically arriving jobs as load fractions to available Wi-Fi routers, making the cluster more robust to dynamic demand. We model and simulate the system using the SimPy environment to study the effect of different load distribution strategies, job scheduling strategies and their key parameters. This work can be further extended to adopt blockchain technology in a variety of applications needing decentralised implementation.

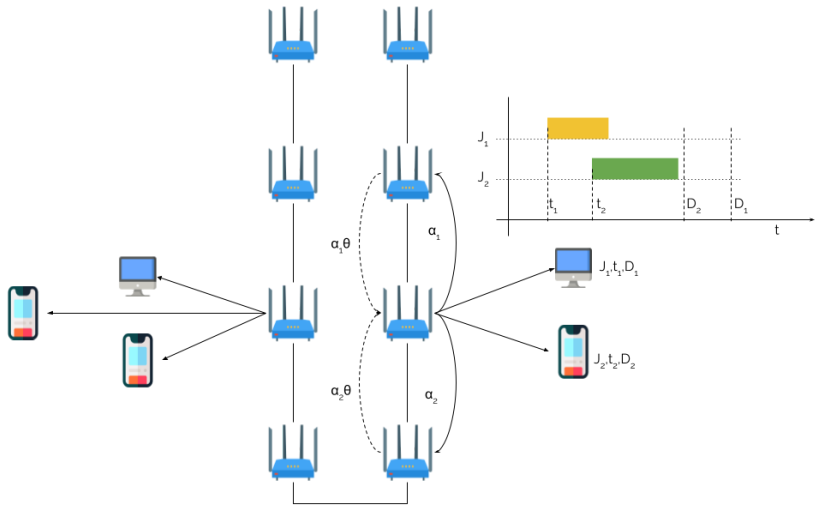

Fig 1. A cluster of WiFi-router based MEC for Mobile device computational load offloading

1. *Can 5G actually replace Wi-Fi?* Extreme Networks. Retrieved April 1, 2022, from https://www.extremenetworks.com/extreme-networks-blog/can-5g-actually-replace-wi-fi
2. Liang, Bin & Gregory, Mark & Li, Shuo. (2021). Multi-access Edge Computing fundamentals, services, enablers and challenges: A complete survey. Journal of Network and Computer Applications. 199. 103308. 10.1016/j.jnca.2021.103308.
3. N. Paillou, L. Thirion-Lefevre and R. Guinvarc'h, "Characterization and Extraction of Roads Using Polarimetry Methods in L-Band SAR Images," *2021 IEEE International Geoscience and Remote Sensing Symposium IGARSS*, 2021, pp. 327-330, doi: 10.1109/IGARSS47720.2021.9553904.